RAM 11-FT TRADEMASTER AND MAXIMIZER DIMENSIONS

Last Update: 07/16/2015

STANDARD OPEN-TOP SERIES

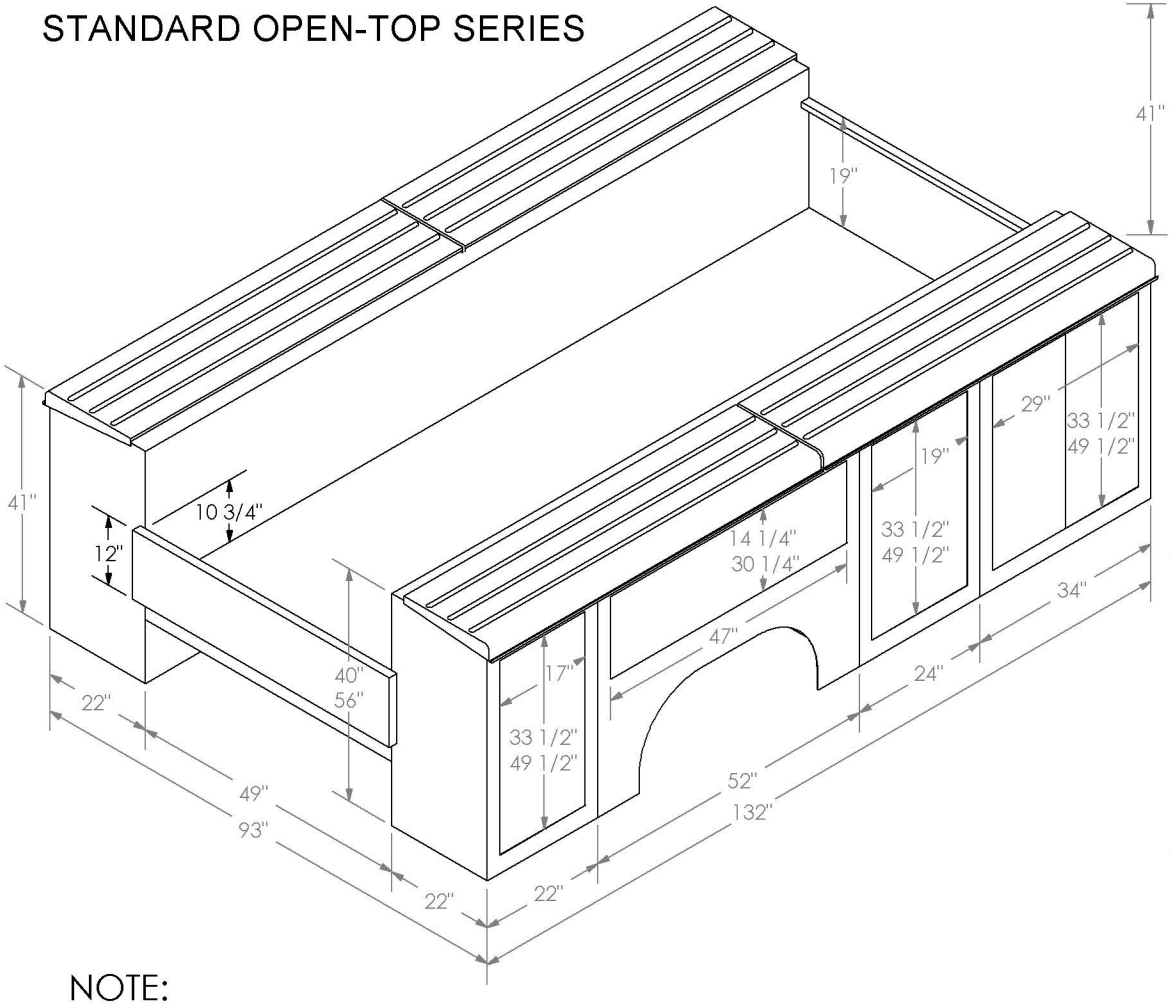

HORIZONTAL SERIES

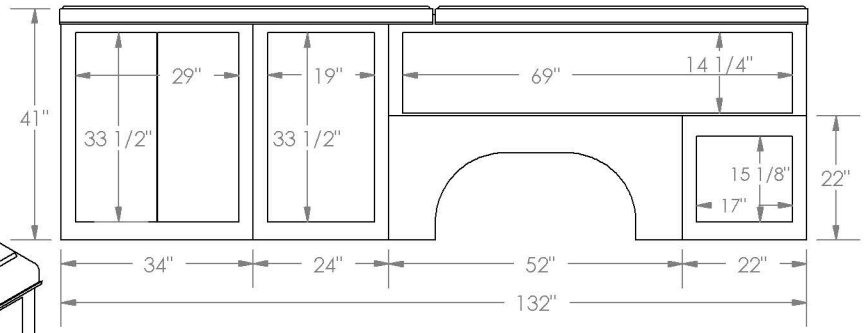

CLOSED-TOP MODEL

OPEN-TOP MODEL

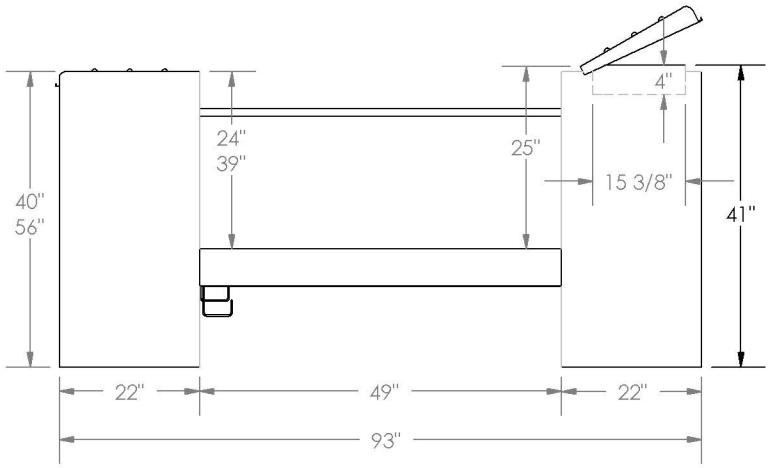

NOTE:
1) DOOR COMPARTMENT DIMENSIONS ARE THE CLEAR DOOR OPENING.
2) TOP VERTICAL DIMENSIONS ARE STANDARD HEIGHT BODIES, BOTTOM DIMENSIONS ARE MAXIMIZER BODIES.
3) COMPARTMENT DEPTH DIMENSIONS SHOWN ARE STANDARD.